Water History
https://doi.org/10.1007/s12685-025-00377-6

Designing the Roman water-lifting wheel operated by treading: Vitruvius to Dolaucothi to Rio Tinto, a process of adaptation and invention

Lauro Alberto Barbaresi[1]

Received: 17 May 2024 / Accepted: 27 October 2025
© The Author(s), under exclusive licence to Springer Nature B.V. 2025

Abstract
This research reconstructs for the first time the design procedures and thought processes of the Roman engineers who in the first and second century CE built two water-lifting wheels with compartmented rims. The optimization process of these wheels is examined, from that described by Vitruvius to the models with compartmented rims at Dolaucothi Rio Tinto. For the latter two, analysis demonstrates how the number of compartments was determined, why the mouth of the compartments is adjacent to the anterior septum and distant from the outer edge of the wheel, why the mouth of the Dolaucothi wheel has the shape of an entire shield and why that of Rio Tinto half shield with a cut corresponding to the internal diameter. Finally, the theoretical efficiency index of the two wheels are calculated and two possible operating modes of the Rio Tinto wheel are described.

Keywords Water lifting wheels · Roman technology · Roman engineers

Water-lifting wheels in Vitruvius

The Romans used several types of water-lifting devices, each with a particular advantage that suited the intended function (Oleson 1984, 2000). The basic designs all originated in the Hellenistic Greek world, although Roman engineers made significant improvements in design, materials and propulsion.

The most useful ancient description of these devices appears in the last quarter of the first century BC in Vitruvius, *De architectura* 10.4-7. Several of the devices involved a large, rotating wheel with containers for the water, operating partly submerged in a water source, often a stream or conduit. The oldest design may be what Vitruvius calls the *tympanum*, a hollow, drum-like wheel with triangular interior compartments that received water from openings on the rim and discharged the water through openings just above the axle, at the

✉ Lauro Alberto Barbaresi
l.barbaresi@libero.it

[1] Grottaferrata, Italy

Published online: 23 December 2025

pointed inward end of the compartment. Vitruvius asserts that this wheel was turned by men treading the rim. The *tympanum* could lift large quantities of water to a relatively low height.

Another class of water-lifting wheels driven by treading was designed to lift the water to a higher level than the *tympanum*. The design described by Vitruvius (*De* arch. 10.4.3) featured open-mouthed containers (*modioli quadrati)* fastened to one side of the rim of the wooden wheel (Fig. 1). The containers were completely immersed in the sump, so that they resurfaced filled with water which then was poured into the upper channel. These wheels could provide a water lifting height equal to approx. 60% of their outer diameter.

Post-vitruvian water-lifting wheel design

This original wheel design received a revolutionary modification at Dolaucothi (first century CE) where a series of improvements were introduced, all aimed at increasing the wheel's lifting height: the containers are incorporated into the outer edge of the wheel (Fig. 2) and the mouth for filling and emptying the water is open to the side, resting on the anterior septum of the compartment, suitably distanced from the outer edge. The compartment could thus be in a horizontal position when the mouth emerges completely from the sump and consequently withdraw the water at the maximum possible depth.

The inside diameter is sized so that all the water taken at the maximum depth could then be entirely poured at the maximum possible height. In practice, when the compartment lifts the water collected at its lower horizontal position, the discharge begins precisely at the same maximum height at which it ends (corresponding to the upper horizontal position of

Fig. 1 Vitruvius' wheel

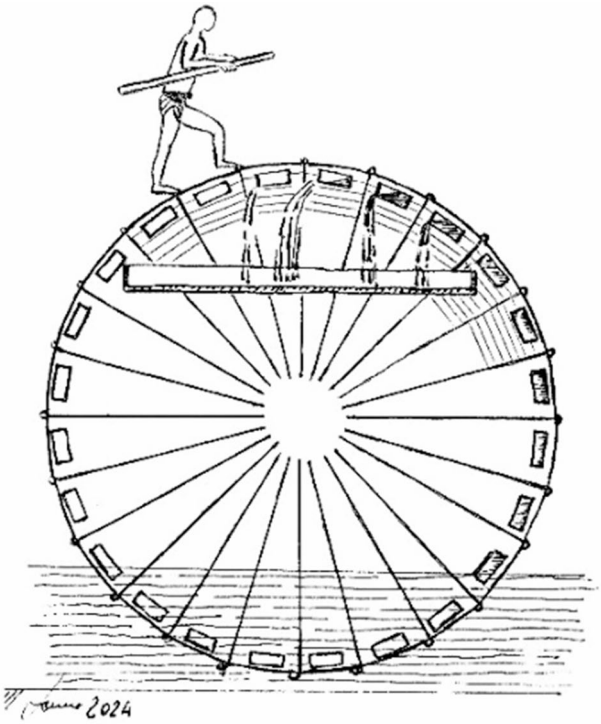

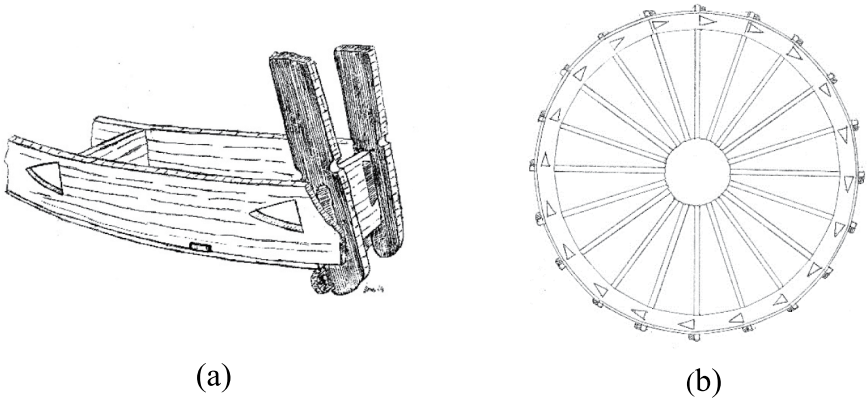

Fig. 2 Dolaucothi wheel: **a** Axonometric view of a compartment without its internal surface. **b** The complete wheel with its 20 compartments

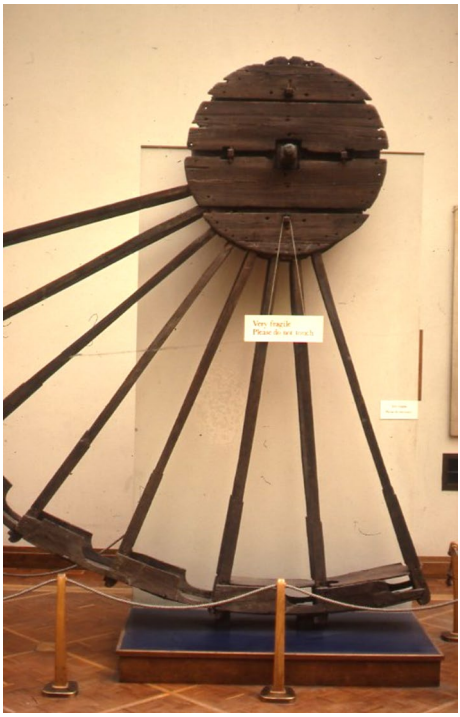

Fig. 3 The Rio Tinto wheel at the British Museum (photo: J.P. Oleson)

the compartment) and takes place within the maximum possible arc, corresponding to the length of the compartment. The Dolaucothi designer consequently achieves a total lifting height equal to 91% of the wheel's diameter.

Further improvement in the performance of this type of wheel was obtained at Rio Tinto (Fig. 3) where the designer, although presumably not aware of Dolaucothi wheel, applies the same principles, but with an important variation. The volume of water to be collected by

the compartment in the horizontal position when the mouth emerges was reduced significantly. This change reduced the torque needed to turn the wheel (by a human treading on the rim), thus allowing the increase of the inside diameter of the wheel and therefore of the maximum lifting height.

Given the reduced quantity of water raised, in order to obtain alignment of the start and end discharge levels, the mouth opens at the internal edge of the rim, assuming the characteristic half-shield shape found in most of the archaeological remains of this type of water-lifting wheel.

As will be shown below, the Rio Tinto wheel could operate in two different modes: “skimming”, that is, with the compartment not completely immersed in the sump, and "plunging", that is, with the compartment completely immersed. Optimal results are achieved with the skimming mode: the wheel can discharge entirely at the maximum height (compartment in the upper horizontal position) all the water that it can withdraw at the maximum depth (compartment almost in the lower horizontal position) also obtaining the maximum flow rate. In skimming mode, the maximum total lifting height is equal to 95% of the diameter.

To obtain these optimal results, the operator, by appropriately varying the rotation speed of the wheel he trod, always withdrew the same volume even when the water level in the loading well varied. We can say that the wheel was designed to behave like a pump operating at a constant discharge.

The Dolaucothi wheel

Wheel installations are preserved in the Mithras Baths and many other Roman sites, and two virtually entire wheels with compartments on the rim were preserved at Rio Tinto (Oleson 1984: 251–59, Figs. 113–28) and another at Tharsis (Oleson 1984: 272–74, figs. 150–53; Domergue and Bordes 2004). At Dolaucothi (Oleson 1984: 205–6, Fig. 66), however, we have only a fragment of one side of the wooden rim of a drainage wheel (Fig. 4), found near the remains of the mine gallery. The specimen is partly burnt, representing perhaps the only surviving remains of a wheel dismantled and used as firewood. The fragment is, however, sufficient to trace back to the dimensions of the adjacent compartment and the entire wheel.

This seemingly insignificant fragment in fact provides remarkably informative evidence concerning the process of design and the efficiency of function of the wheel of which it was

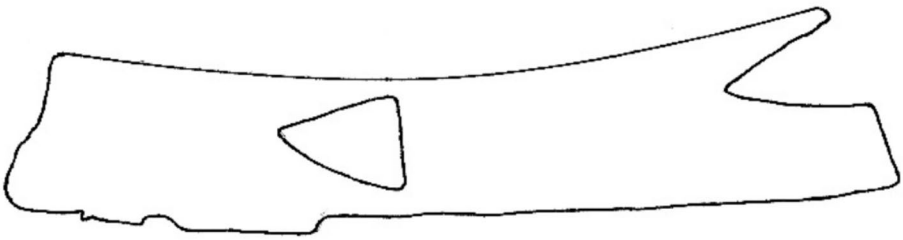

Fig. 4 Fragment of the Dolaucothi wheel preserved in the National Museum of Wales

a part. I will first provide measurements and an evaluation of the existing reconstruction drawing of the wheel, then reconstruct a probable design process.

The Dolaucothi wheel embodies a new concept of wheel design, completely different from the one described by Vitruvius. These differences bring up the important question of how Roman hydraulic engineers designed the compartmented wheels that served a variety of purposes at widely scattered sites. Did they carefully calculate and design for the needs of particular applications? There is some modern literature concerning the discharge capacity of the various Roman water-lifting devices, but less attention has been paid to the efficiency of Roman water-lifting wheels with compartments on or in the rim. Furthermore, these analyses have all been rudimentary in character (Schiøler 1973: 137–41; Weisgerber 1979; Domergues and Bordes 2004: 99–102). In addition, there has been no research at all–as far as I can tell–concerning the process a Roman engineer might have followed in adjusting the design of a well-known water-lifting device to make it more efficient in a particular situation.

The following section of this paper will consider physical evidence for the careful design of the water-lifting wheel with compartmented rim used in the first-century Roman mine at Dolaucothi in Wales (Oleson 1984: 175, 179, 205–6, Fig. 66), making use of careful mathematical analysis of its efficiency. The calculations are aimed at reconstructing and verifying, on the basis of today's mathematical/trigonometric tools, the choices made by the Roman designers. The subsequent and final section will follow the same procedure for the Rio Tinto wheel. Attention will be paid as well to the possible thought process of the engineer involved in planning and providing the drainage system. Below I pose seven questions concerning the design of the wheel, as an approach to understanding what problems the engineer faced and how he solved them.

Question 1: why are there 20 compartments?

The number of compartments in the Dolaucothi wheel was not chosen at random; it is closely related to the wheel movement system and the knowledge of Euclidean geometry possessed by the designer. The rotation of the wheel was maintained by someone (probably a slave) who walked on cleats fixed across the extensions of each pair of spokes, so it is evident that these should be placed one step apart (about 0.5 m) from each other. Therefore, dividing the external circumference (11.31 m) by this length, the designer obtained the theoretical approximate number of rim compartments: $N_t \sim 22.62$. But he was unable to divide the 360 degrees of the axle rim or central shaft into portions of that number.

Assuming, however, that the designer knew how to inscribe regular polygons of 3, 4, and 5 sides in a circumference, that he knew how to divide an angle into two (Euclid) or three equal parts (Nicomedes' conchoid, Hippias' trisector, Archimedes' method, spiral of Archimedes), then he was able to inscribe polygons of 16, 18, 20, 24, 27, 30 and 32 sides in the aforementioned circumference. Therefore, having to choose between 20 and 24, he opted for 20, because fewer spokes mean a cheaper wheel, while 20 pairs of spokes nevertheless allow for sufficient strength and stability.

Other numbers appear in or are reconstructed for surviving Roman water-lifting wheels in addition to the series indicated by me. For example, the following are cited for the Santo Domingo wheels (Oleson 1984: 264–66): Deligny reconstructs 25 pairs of spokes, Schiøler

28, Gonzalo y Tarin and Palmer 22, but these numbers seem to derive from approximate numerical calculations and not from a count of the spokes on physical remains. The physical remains of Roman wheels of this type have between 20 and 30 compartments and pairs of spokes (Oleson 1984: 344–45, Table 2).

Question 2: why is the mouth situated adjacent to the anterior septum of the compartment and distant from the outer edge of the wheel?

The positioning of the mouth adjacent to the anterior septum AB at the distance AK from the external edge (Fig. 5), allows the wheel, at a suitable rotation speed, to operate in such a way that at the moment of complete emersion of the mouth, the compartment is in a horizontal position with the internal water at the same level as the external reservoir, as shown in the figure. In this way the maximum withdrawal height of the water contained inside the compartment is achieved (i.e. the distance between the centre of the wheel and the water level in the sump).

The same quantity of water could also be withdrawn with the mouth positioned at any point K' between L and K (Fig. 6), but the designer obviously decided to place it on the front divider because this position guarantees the widest arc of immersion, the maximum head h_{bm}, and therefore the maximum water flow rate of the wheel.

But even in this position the maximum head is too low (just about 2 cm on the wheel in question) and the regular supply to the compartments occurs only if the movement of water is unidirectional, without interruptions or slowdowns, constantly directed from the surface of the sump towards the mouth of the compartments.

In hydraulic terms it is said that the mouth must always act as a "bottomless well". To obtain this result it is necessary that the volume inside the compartment under the point K

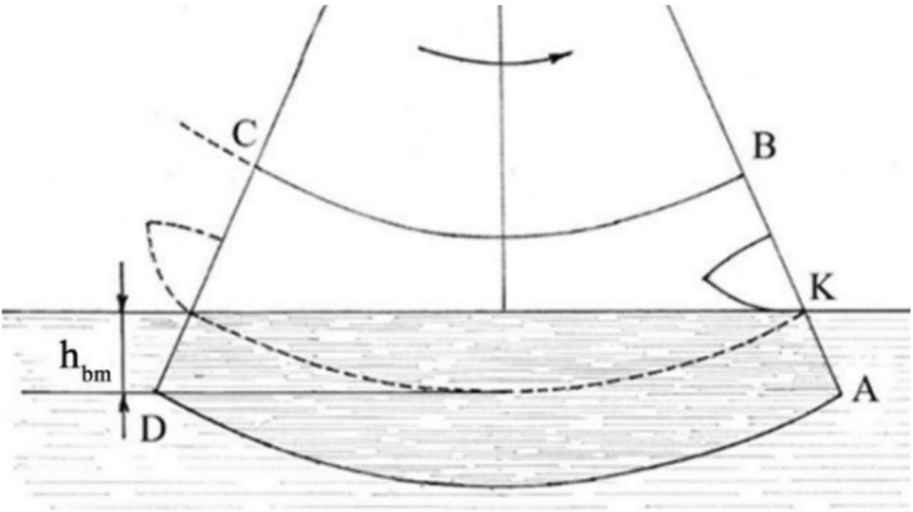

Fig. 5 The compartment ABCD at the moment in which the lower point K of the mouth leaves the free surface of the water. At a suitable rotation speed, the water inside the compartment can be at the same level as that outside; for higher speeds the internal level will be lower than the external one

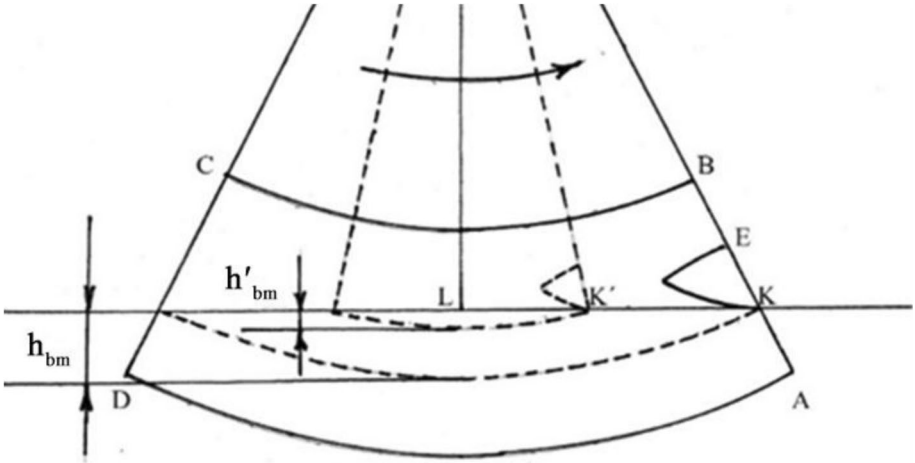

Fig. 6 Schematic representation of the compartment ABCD in a horizontal position when the lower vertex K of the mouth leaves the free surface of the water. (KE = mouth opening). With the mouth at point K, the widest arc of immersion, the maximum head h_{bm} and therefore the maximum flow rate are obtained

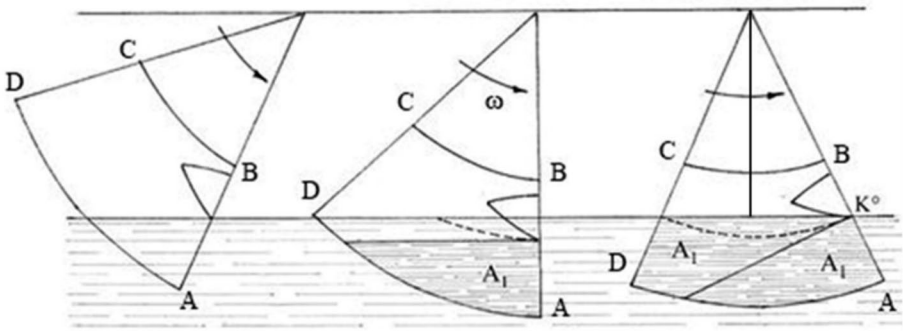

Fig. 7 The positioning of the lower vertex of the mouth on the K° point allows the compartment to operate in such a way that the level of the incoming water reaches K° only in the middle and at the end of the immersion stroke

of Fig. 6 is always greater or, at the limit, equal to that of the incoming water, whatever the position of K along the entire arc of immersion. It follows that, if the mouth has a profile such as to draw the same quantity of water both in the immersion and emersion phase, its lower vertex must be placed at point K° (Fig. 7) where the perpendicular to the radius subtends half of the area subtended by the perpendicular to the bisector of the sector.

With the vertex at this point, with a suitable speed of rotation, the wheel can operate as indicated in Fig. 7, with the level of the incoming water reaching it only halfway and at the end of the immersion run.

However, the Dolaucothi designer went further. The compartment operated in such a way that the level of the internal water reached the mouth only at the end of the emersion

run (and not also halfway as indicated in Fig. 7) and then, having identified the K° point (Fig. 8–OK° = 173.28 cm), the K vertex was positioned ~ 1.5 cm above it (OK = 171.74 cm). In this way, without excessively penalizing the intake height (i.e. the height OH between the wheel centre and the water level in the sump, Fig. 8), he decided to operate with a raised water section of 515.2 cm^2, half of which (257.6 cm^2 withdrawn in the middle stroke) moves to point C around 0.8 cm below vertex K.

Question 3: why was the value of the internal radius set at 158.41 cm?

The choice of the internal radius was also carefully calculated. Drawing a compartment in its upper horizontal position at the end of the unloading (Fig. 9a) and once the minimum opening KE of the mouth has been set (which still guarantees an easy withdrawal of water during the loading phase) the designer goes back to point E', which is symmetrical to E (with respect to the perpendicular to the centre wheel) in which the unloading must begin if it is to occur within the widest possible arc (E'E) and therefore with the maximum time available. The equality $Area_{C'F'E'B'} = 515.20\ cm^2$ allows the internal radius OB' to be determined as 158.41 cm.

In this way the following remarkable results are obtained (Fig. 9b):

- The raised water at maximum depth is entirely discharged at the maximum possible height;
- The discharge is carried out within the widest possible arc, using the maximum time available; and
- The simultaneous maximum value of the intake and discharge heights ensures the maximum total lifting height.

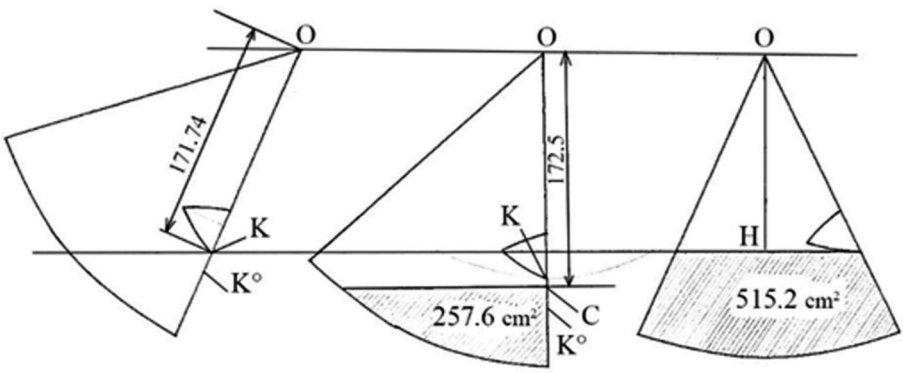

Fig. 8 With the vertex K positioned above K°, the level of the water withdrawn reaches it only at the end of the dive

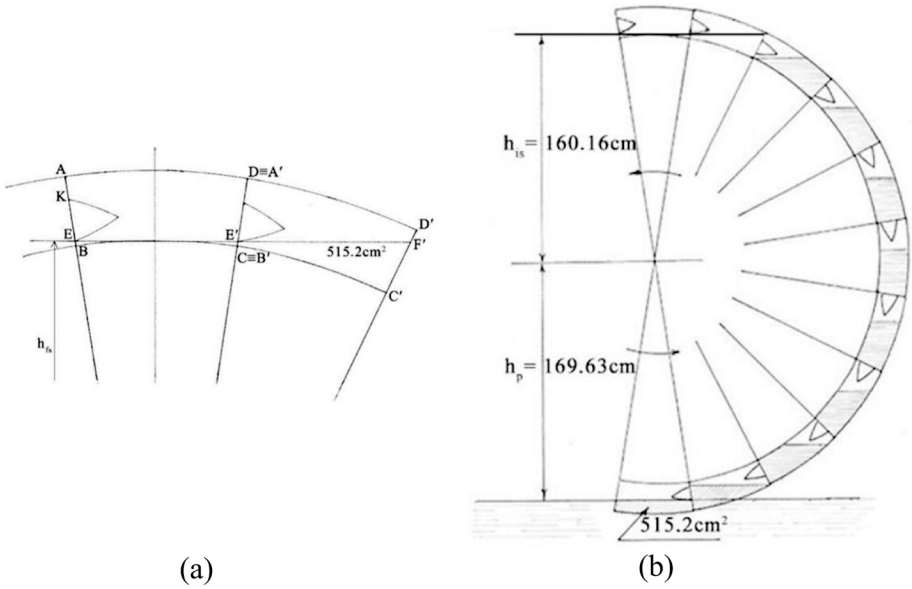

Fig. 9 Dolaucothi wheel **a** start (point E') and ending (point E) of unloading; **b** if the compartment is horizontal at the moment of emersion of the mouth with a raised water section of 515.2 cm^2, the maximum values of the drawing (h_p) and discharge (h_{is}) heights are obtained simultaneously

Question 4: why is the mouth smaller than the theoretical maximum?

Having drawn the section of the wheel, the designer could then trace the positions of the free surface of the water inside the emerged compartments in positions 1–10 of Fig. 10a. All the positions assumed by the free surface of the water in the passage of the compartment from position 1–10, reported within the same compartment, generate the envelope (Fig. 10b dashed line) within which the shape of the mouth must be contained.

If we assume the entire dashed line, we can note that the sections immersed during the immersion phase would be much lower than those of the emersion phase, and therefore it would not be possible to balance the quantities of water withdrawn during the two phases. This is shown in Fig. 11 with the compartments separated out for clarity. It is clearly seen that the sections immersed in the immersion phase (from 0–M), would be less than half of those in the emersion phase (from M–F).

To draw equal volumes during the two phases, the immersed sections must be equivalent. To obtain this result, the designer limits the mouth only to the anterior part of the dashed curve (Fig. 12) with two arcs: KC tangent to the free surface of the water when the mouth emerges (position 1 of Fig. 10b), and CW tangent to the free surface of the inland water when the discharge begins (position 10 of Fig. 10b). The result obtained is a significant improvement (Fig. 13).

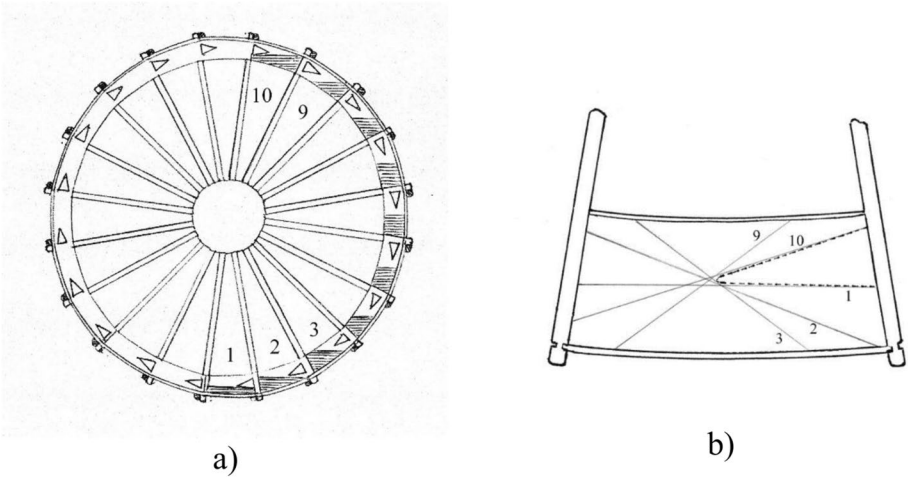

Fig. 10 Dolaucothi Wheel **a** positions of the free surface of the water in the rising compartments; **b** lines 1 to 10 indicate the positions of the free water surface in positions 1 to 10 of (**a**)

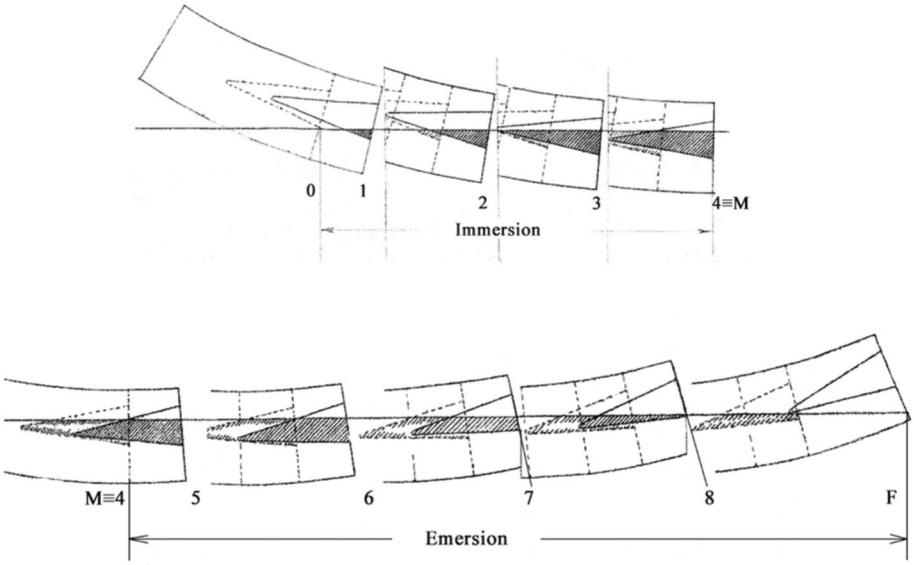

Fig. 11 An arc OMF of the Dolaucothi wheel with the compartments separated out for clarity. This shows that if the entire dashed curve of Fig. 10b is assumed as the shape of the mouth, the immersed sections from O–M would be less than half of those from M–F

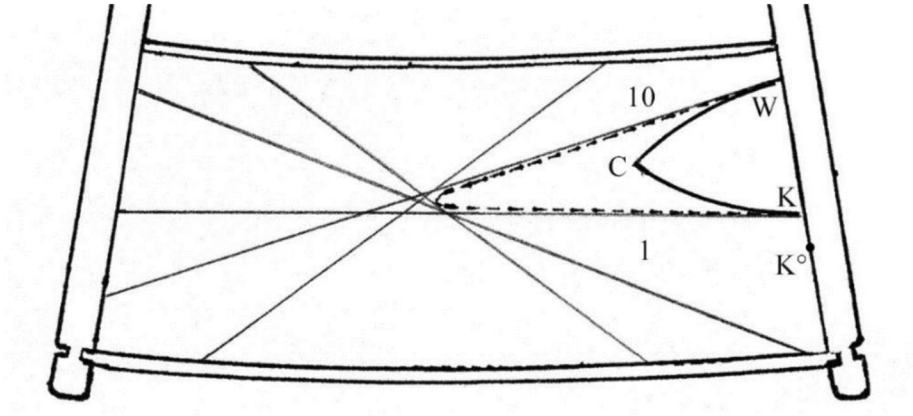

Fig. 12 The compartment mouth reduced only to the anterior part defined by the KCW curve

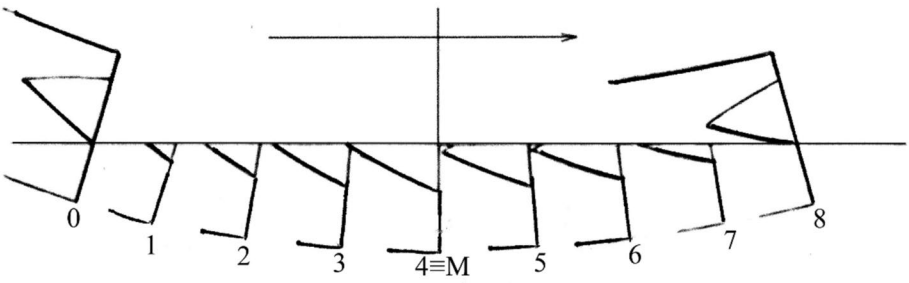

Fig. 13 The designer has reduced the profile of the mouth in order to make the immersed sections of the mouth equivalent during the two phases of immersion (OM) and emersion (M8)

Question 5: what was the width of the compartment?

The actual width of the Dolaucothi compartments (across the rim of the wheel) could not be determined from the surviving remains. To try to identify a workable approximate width and thus the volume of the compartments, a study was conducted assuming three values: width $l_i = 10$, 15, and 20 cm. For each of the proposed widths, the volume **V** of the water lifted by each compartment was calculated,[1] the overall resisting moment $\mathbf{M_r}$ that this quantity determines on the wheel and finally the angular position **β** where a man weighing 70 kg balances this moment, i.e.70 $R_e \sin\beta = \mathbf{M_r}$ where R_e is the radius of the wheel from the centre axle to the point at which the man stands (Fig. 14).

Subsequently, from the length CD of the compartment (Fig. 14), the height CE of the step which the operator had to climb to pass from one cleat to the next was determined, and, assuming that he could continuously maintain an average speed of ascent $V_s = 300$ m/hour,[2]

[1] The volumes **V** are calculated assuming the conditions of Fig. 5: Horizontal compartment at the moment of complete emersion of the mouth and internal water at the same level as the external one ($\mathbf{V} = 515, 2 * l_i$).

[2] Mountaineers know the 300 m/hour rule according to which, if you have a good pace, you can continuously climb a difference in altitude of 300 m every hour. It is possible to go faster, but at the cost of effort that cannot

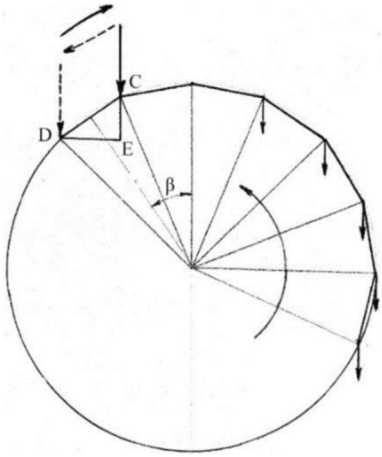

Fig. 14 CD is the distance between two successive cleats placed at the ends of each compartment

Table 1 Dolaucothi wheel, flow rates calculated for different compartment widths

Width of compartment across rim of wheel l_i (cm)	Volume of water in each compartment V (litres)	Resisting moment M_r (kgm)	Angle at which operator stands from top of wheel β (degrees)	Rotation speed achieved (RPM)	Flow rate achieved Q_s (l/min)
10	5.15	52.63	25 (position C)	~1.00	~107
15	7.73	79.00	38 (position B)	~0.71	~110
20	10.30	105.26	57 (position A)	~0.52	~108

the time **τ** employed for the movement of the single compartment was calculated. From this result the number **n** of revolutions per minute (RPM) of the wheel was obtained[3] and finally the value of the flow rate $\mathbf{Q_s}$ poured into the upper discharge channel. In formula:

$\boldsymbol{\tau} = CD \sin\beta / V_s$ s/compartment.

$n = 1/(\tau\ 20/60)$ rpm.

$Q_s = (V/\tau)\ 60$ L/min.

The results of the calculations are shown in Table 1. The positions assumed by the operator in the A and C cases are shown in Fig. 15.

The last column of Table 1 confirms that the flow rate does not depend on the volume raised by the single compartment and the well-known physics formula according to which, if the applied power and the lifting height remain constant, the flow rates also remain constant.

In this case it can be observed that, as the raised volume increases, the resisting moment increases and therefore the operator is forced to move up to a position where the steps are higher. As a result, for the same ascent speed, the time needed to pass from one cleat to the next is greater and therefore the speed of rotation is reduced. The increase in the

be sustained in the long run. The power developed by a 70 kg man travelling uphill at such speed is defined as "normal power" (see also: http://www.caifeltre.it/escursionismo-calcolo-dei-tempi-percorrenza-un-sentiero, accessed 27/06/2025 1036 GMT).

[3] It should be noted that at the operator's ascent speed of 300 m/hour, which corresponds to the rotation speed n of the wheel between 0.5 and 1 RPMs, the indicated volumes ($\mathbf{V} = 515.2\ l_i$) cannot be taken with the horizontal compartment at the moment of emersion of the mouth: for those speeds the water head and the rotation speed must be increased and the compartment will emerge slightly inclined upwards. However, the differences are within the calculation approximations.

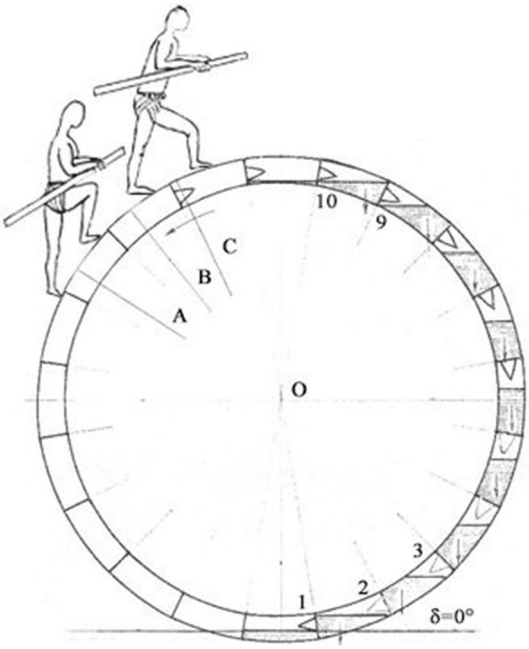

Fig. 15 Knowing the volume of water raised by the single compartment, it is possible to calculate the position assumed by the operator

lifted volume, however, is counterbalanced by the reduction in the rotation speed, with the result that the flow rate remains constant (apart from the differences due to calculation approximations).

Question 6: what circumstances affect the treading efficiency and flow rates?

What happens when the water level in the sump reaches significant value levels? How do the flow rates vary? In particular, in the event of flooding of the water source, is a single operator still able to move the wheel, or is he forced to leave his workplace?

With the inclination of the compartment at the moment of complete emersion of the mouth indicated by δ (Fig. 16), relative to three values δ = 9°, δ = 18° and δ = 36°, corresponding to different water levels in the sump, the drawn flow rate $\mathbf{Q_p}$ and the flow rate poured into the upper channel at the unloading end height (h_{fs} = 160.16 cm, see Fig. 9b) $\mathbf{Q_s}$ were calculated for different compartment widths l_i.[4]

The results of the calculations are shown in Table 2.

It can be observed that only the wheel with l_i = 10 cm can be moved regardless of its δ immersion degree and that this wheel pours the maximum flow rate into the upper channel ($Q_s \approx 107$ L/min) when δ = 0.

For such a wheel the position relative to δ = 18° is at its limit. For greater degrees of immersion δ, the operator will go backwards climbing towards the summit of the wheel. In fact, the volume withdrawn from the single compartment does not vary (remaining around 9 L) while the number of emerged compartments containing water is reduced and therefore

[4] Obviously, the difference Qp-Qs falls back down before reaching the upper channel.

Fig. 16 The immersion angle δ

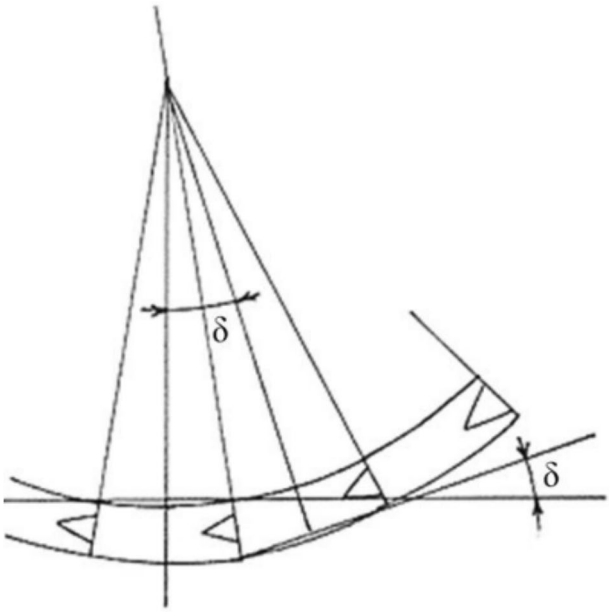

Table 2 Dolaucothi wheel, flow rates calculated for different compartment widths

Emersion angle δ (°)	Volume of water per compartment V (litres)	Resiting moment M_r (kgm)	Angle of operator Position β (°)	Revolutions per minute n (RPM)	Flow rate collected Q_p (litres/min)	Flow rate discharged Q_s (litres/min)
Compartment Width l_i = 10 cm						
0	5,15	52,63	25	~1	~107	~107
9	7,5	78,3	38,4	0,71	~107	~73
18	9,3	86,2	~43	0,64	~120	~65
36	9,7	78,4	38,5	0,71	~137,7	~73,1
Compartment Width l_i = 15 cm						
9	11,25	117,45	~68	~0,47	~106	~49
18	14,6	(131)	–	–	–	–
Compartment Width l_i = 20 cm						
9	15	(156,6)	–	–	–	–

also the M_r moment on the wheel. Thus the speed rises again and with it the flow rate Q_s discharged into the upper channel.

It should be noted that the total resisting moment acting on the wheel does not depend only on the weight of the water lifted. To the above moments M_r must be added those due to the friction of the axis and to the braking action of the water on the compartments and on the spokes. Consequently, the angular positions β actually assumed by the operator were necessarily higher than the values indicated in the calculations above. In any case it is reasonable to assume that, at least in the case l_i = 10 cm, a single operator was able to start and keep the wheel rotating by moving away from the top of the wheel, to increase the driving moment

up to the maximum theoretical value of 126 kgm, against the maximum value ~ 86 kgm due to the weight of the water alone.

Question 7: what efficiency index value is achieved?

The efficiency index of the wheel is the ratio between the total maximum lifting height and its external diameter. In the Dolaucothi wheel it reaches the theoretical value 0.91:

$e_t = (169.63 + 160.16)/361.8 = 0.91$.

This is great leap forward compared to the figure of 0.60 for the Vitruvian wheel! This index is defined as theoretical, because it can only be reached if the wheel rotates at very low speeds, but at low speeds the raised water falls almost entirely into the gap between the wheel and the discharge channel. To deliver the desired flow rate, it is necessary to operate with a higher frequency of revolutions and immersions.

In fact, it is observed (see Fig. 17) that a volume $2A_1$ can be withdrawn with the head h_{m1} at a very low rotation speed ω_1; the result is a very limited flow rate and difficulty in transferring the raised water from the wheel to the discharge channel. When the mouth emerges, the level of the drawn water passes through K°. To obtain a higher flow rate and facilitate unloading, the same volume $2A_1$ needs to be withdrawn with a head $h_{m2} > h_{m1}$ at a speed $\omega_2 > \omega_1$. When the mouth emerges, the compartment is no longer in a horizontal position but inclined upwards by an angle δ_1, the internal water level is no longer tangent to the profile of the mouth, but slightly below it. The intake height is slightly decreased ($OH_2 < OH_1$) and with it the real efficiency index of the wheel, if only minimally.

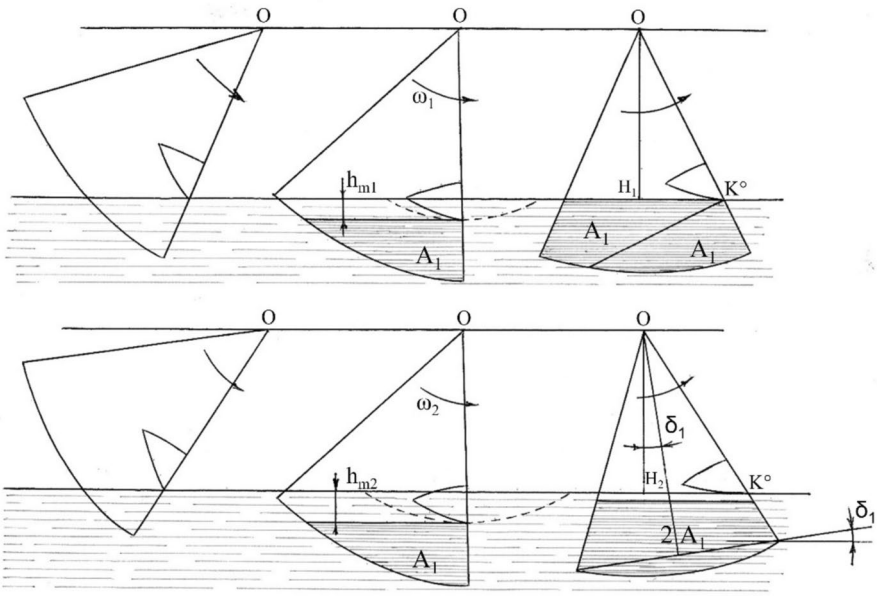

Fig. 17 The same $2A_1$ volume can be picked with increasing heads and speeds

The Rio Tinto wheel

The ancient Roman water-lifting wheel, operated by treading, reaches the peak of its evolutionary process at Rio Tinto in the second century CE. It is illuminating to compare the design and functioning of this wheel from Rio Tinto with the Dolaucothi wheel discussed above.

During a visit to the British Museum (1 December 1997), I was able to inspect the Rio Tinto wheel partly reassembled, to draw the side profile of a compartment[5] and to verify all the dimensions of the compartment and the whole wheel. In the British Museum, the wheel has been reassembled with compartments having two lateral mouths, but most likely the compartments actually had only one row of mouths (Oleson 1984: 257). I will therefore continue the analysis assuming a single row of lateral mouths.

It is noted that the considerations on the number N of compartments and the position of the mouth carried out for the Dolaucothi wheel continue to apply also for the Rio Tinto wheel. The number N = 27 of the compartments coincides in fact with the smaller of the two polygonal numbers (27 and 30) which contain within them the theoretical number $N_t = 2\ \pi\ 2.28/0.5 = 28.65$ and the mouth continues to be adjacent to the anterior septum of the compartment at a certain distance from the external edge. Other points are listed below concerning the design of the wheel as an approach to understanding what problems the designer faced and how he solved them. In my opinion, the wheel's designer assumed that the operator who trod the wheel could monitor the optimal collection and discharge of the water. To my knowledge, this issue has never been studied with the necessary care.

Why was the compartment width been set at l_i = 19 cm?

The choice of the width l_i of the compartment must be very carefully calculated. It is true that, for the same volume withdrawn, an increase in l_i allows the area AMNB in Fig. 18 to be reduced and therefore the total lifting height to be increased, but it is equally true that it can penalize the speed at which the water flows during the discharging phase. The depth must therefore be limited to just enough to guarantee the proper support for the operator's feet.

It should also be borne in mind that for l_i values beyond a certain limit, the water would no longer be able to "jump" from the compartment to the discharge channel and would spill into the gap between them.

Why was the section of the raised water set at 178 cm^2?

Having drawn the compartment in a horizontal position at the moment of complete emersion of the mouth (Fig. 18), from the AMNB section (detectable with extreme precision from the drawing made) and from the depth of the compartment $l_i = 19$ cm, it is possible to calculate the weight of the water lifted (178 * 19 = 3.38 kg) and where a man weighing 70 kg must be positioned to balance the moment due to all the emerged compartments containing

[5] The reassembled compartments have mouths with varying widths of 14, 15, 16 and 18 cm. Among all, the value of 18 cm was assumed, corresponding to the opening of the 4th element, whose side is one-piece with that of the 5th and therefore its measurement certainly did not undergo changes during the reassembly.

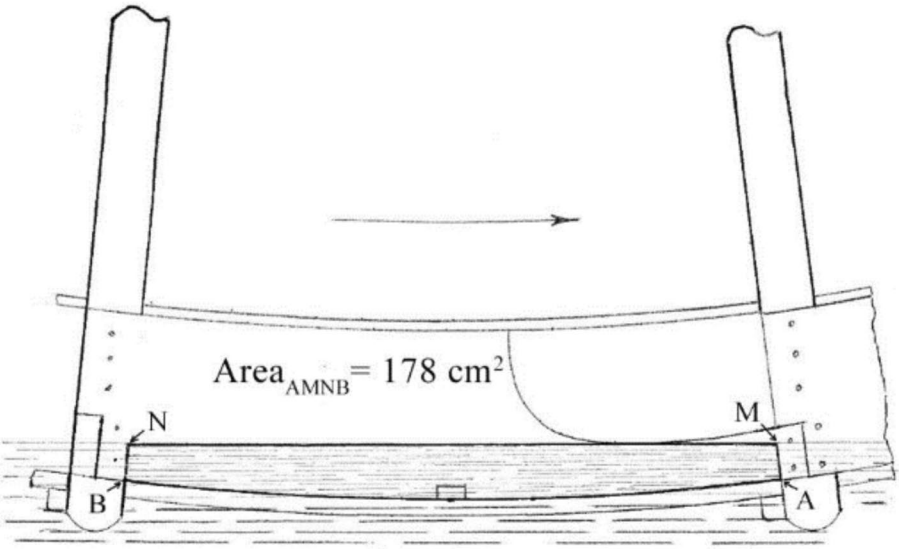

Fig. 18 Rio Tinto wheel: the compartment emerging in a horizontal position guarantees the maximum withdrawal height of the water contained inside

water. It thus emerges that the volume specified above is exactly the one that allows the operator to work in the most comfortable position: ~24° from the top[6]

It is unthinkable that this result is just casual. It is also unlikely that the wheel's designer could have randomly set the weight of the water to be lifted by the single compartment and by serendipity found the operator's most comfortable position. The author believes it more reasonable to suppose that he *first* assumed the operator's most comfortable position and then, with a meticulous application of the principle of leverage, he evaluated the weight of the water to be lifted. The principle of leverage (or in other words, the equilibrium of moments) was well known since the Archimedes times: *weights are inversely proportional to their distances from the fulcrum.* Vitruvius (10.3.3) knew this principle very well.

Hence, I hypothesize that the designer set the following project data at the start:

- 70 kg, operator's weight,
- $\beta = 24°$, his most comfortable operating position,
- 0.5 m, the length of the compartment (necessarily equal to a man's step),
- 300 m/hour, the sustainable ascent speed (which corresponds to a time of 2.44 s for the movement of each compartment),
- $l_i = 19$ cm, the depth of the compartment,

Subsequently, he calculated the section A_{AMNB} of the water to be lifted as approx. 178 cm^2.

[6] The steps of an ideal staircase must have a rise of 17 cm and a tread of 29 cm (58% slope). The slope of the climb in the position 24° from the top is even less: 44%.

Position and shape of the mouth on the intake side

Considerations similar to those that led to individuate the optimal position of the mouth in the Dolaucothi wheel, in Rio Tinto lead to the identification of the LK*R broken line (Fig. 19, straight line r_1 perpendicular to K*O, straight line r_2 perpendicular to OL) as the maximum opening profile for the mouth. A simple geometric construction allows us to identify its UK*R share (in bold on Fig. 19) which, when K*O is in a vertical position (i.e., in the middle of its immersion arc), is immersed in the water (OL = OT, UT = UL).

Shape of the mouth on the unloading side. Why does the mouth also have an opening on the internal diameter?

It was probably experience that suggested the mouth be given the minimum opening RW (Fig. 19) in order to guarantee the correct functioning of the wheel regardless of the various water heads under which it would operate. The value of the RW opening must be set with great care, because whilst it is true that a high value eases the intake and discharge of the water, it is also true that it reduces the inside diameter of the wheel and therefore its discharge height.

The Rio Tinto designer set an opening RW ~ 8.5 cm from which the inside diameter $r_i = 215.1$ cm ensues. This value could also indicate the maximum water head h_{bm} below which the mouth is set to operate. The designer was then able to draw a compartment in its upper horizontal position at the end of the discharge, and realized that (Fig. 20a), if he adopted a shape of the mouth with only the opening R_1W_1 on the front septum, the discharge would begin at the point W_2' inside the arc W_2W_1 (if the area of the raised water is equal to 178 cm^2), at a height greater than that at which it ends and furthermore within an arc $W_2'W_1$ lower than the maximum possible W_2W_1. The reduced opening of the mouth and the reduced available time would make unloading problematic if not impossible.

In order to overcome this inconvenience, the designer realized that at the speeds and volumes with which these wheels usually operate, the water has a tendency to slide on the internal surface of the compartment and only after reaching the front separation septum it

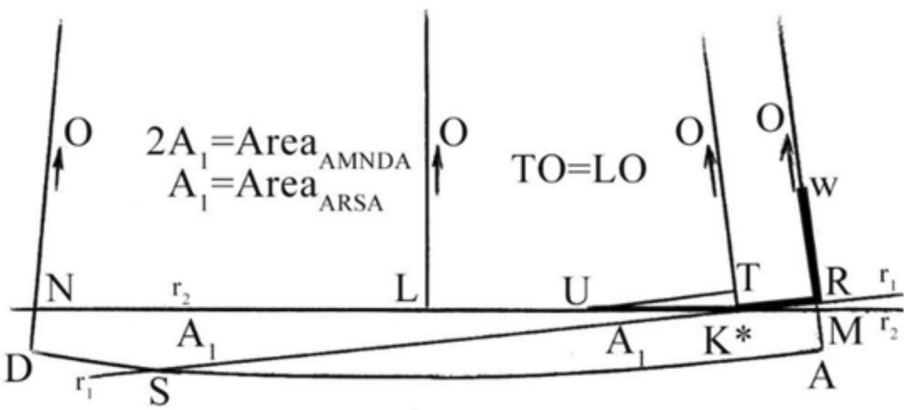

Fig. 19 Rio Tinto wheel: the maximum possible opening of the loading side mouth

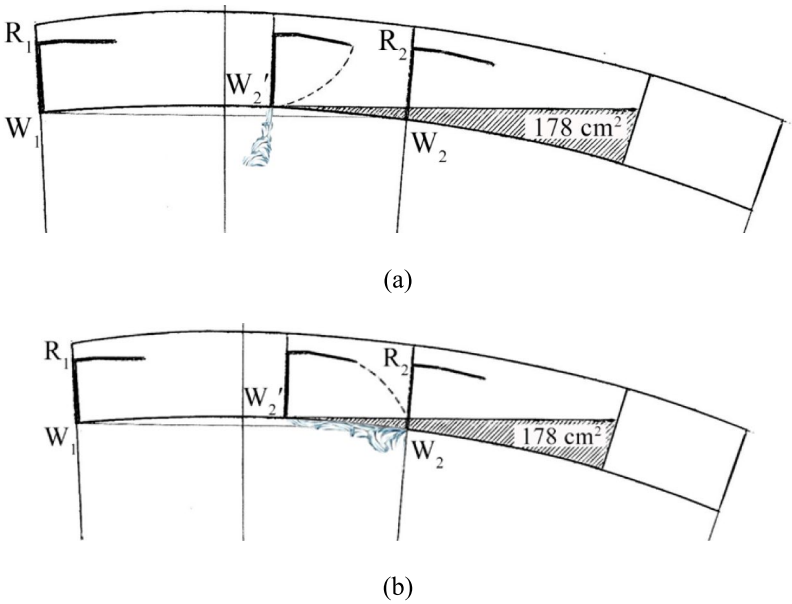

Fig. 20 Rio Tinto Wheel: **a** a mouth with only the opening R_1W_1 would begin discharge at point W_2', i.e. at a higher level than the one at which it ends, and within an arc smaller than the maximum possible W_2W_1; **b** with the $W_2'W_2$ cut the heights of the start and end of unloading become aligned again and unloading can take place within the widest possible arc

outflows laterally in abundance. He therefore opened the base of the mouth with the cut W_2W_2' (Fig. 20b), thus realigning the starting and ending unloading heights. In this way, the outflow can take place within the widest arc available and above all through a mouth much wider, which greatly eases its pouring.

Why is the mouth smaller than the theoretically possible maximum?

With a procedure similar to that indicated for the Dolaucothi wheel, the designer is able to draw inside the compartment the positions assumed by the free surface of the water whenever moving from its lowest position to that at the beginning of the discharge obtaining the envelope (the dashed line) of Fig. 21a within which the profile of the mouth must be contained.

The entire dashed curve cannot be taken as the shape of the mouth, to avoid the imbalance that would occur between the water taken during the immersion phase and that during the emersion phase, as already examined in relation to the Dolaucothi wheel. For this reason the designer limits the mouth only to the forward part of the dashed curve with the UW_2 line (Fig. 21b).

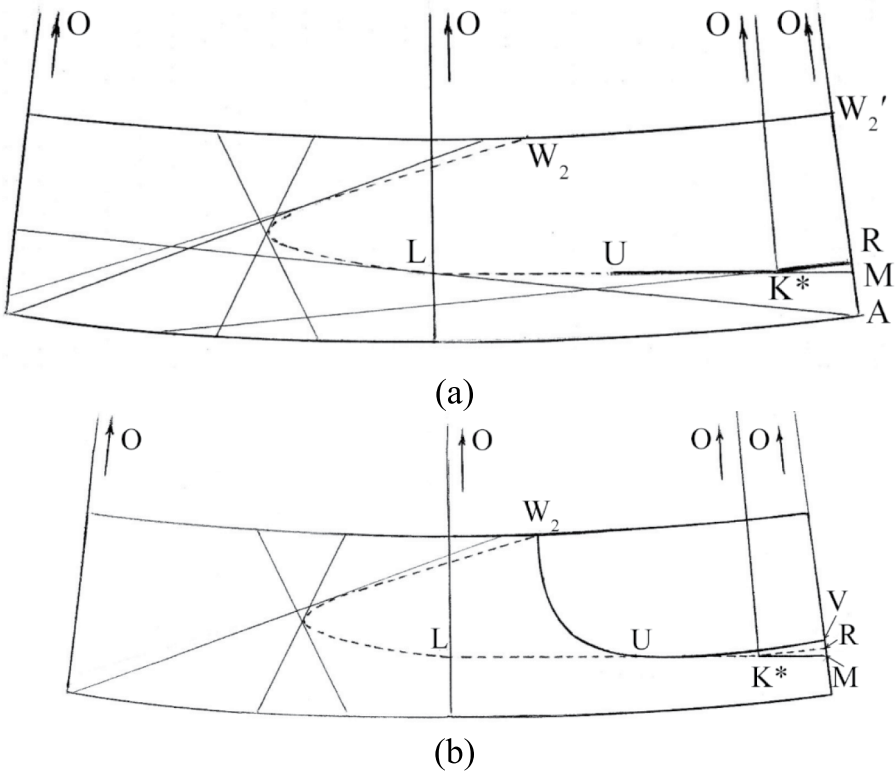

Fig. 21 Rio Tinto Wheel: **a** the dashed line is obtained as an envelope of the positions assumed by the free surface of the raised water (all the lines that subtend the area of 178 cm^2 inside the compartment); **b** in order to limit the imbalance between the water taken during the immersion phase and that during the emersion phase, the designer limited the mouth only to the front portion of the envelope curve

The theoretical efficiency index: skimming and plunge modes

If the withdrawal, start and end unloading heights are calculated with the data in Fig. 22 and $\delta = 0$, the values obtained are shown in Fig. 23. Based on the observed dimensions of the Rio Tinto Wheel in the British Museum, the following remarkable results are obtained:

- The raised water is entirely discharged at the maximum possible height;
- The discharge is carried out within the widest possible arc, using the maximum time available; and.
- The simultaneous maximum value of the collection and discharge heights allow the maximum total lifting height.

The efficiency index of the wheel, i.e., the ratio between the maximum lifting height and its outside diameter, reaches the following theoretical value: $e_t = (223.1 + 212.45) / 456 = 0.955$. This is a big leap forward compared to the 0.60 of the Vitruvius' wheel, even higher than the 0.91 of the Dolaucothi wheel.

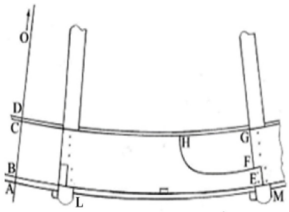

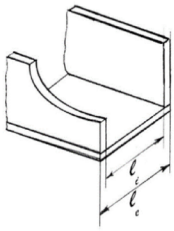

Line on Diagram	Definition	Dimension (cm)
AO	External radius of the wheel	228.0
AB	Thickness of the external boards	0.9
CD	Thickness of the internal boards	0.8
BC	Compartment height	12.0
l_e	External depth of the compartment	22.0
l_i	Internal depth of the compartment	19.0
EF	Distance of the mouth from the outer edge	3.5
GH	Internal mouth opening	18.0
N	Number of compartments	27

From the dimensions given above, the following can be obtained:

- arc length LM = π 228 / 27 = 53.06 cm
- bowstring LM = $2R_e \sin 6{,}66$ = 52.93 cm

Fig. 22 Rio Tinto wheel B.M. Numerical values of the parameters

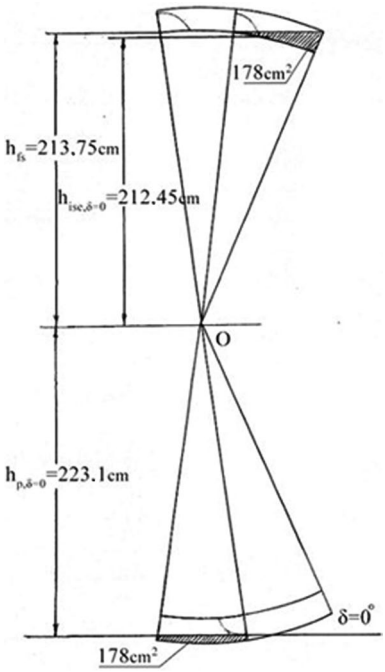

Fig. 23 Rio Tinto wheel. If the compartment is horizontal at the moment of emersion of the mouth ($2A_{1,\delta=0}$=178 cm^2), the maximum values of the withdrawing height ($h_{p,\delta=0}$=223,1 cm) as well as beginning and ending of unloading ($h_{ise,\delta=0}$=212,45 cm and h_{fs}=213,75 cm), are obtained simultaneously. The starting and ending points of the unloading are practically symmetrical with respect to the perpendicular passing through O (the difference presumably due to calculation approximations)

As with the Dolaucothi wheel, however, this theoretical value cannot be obtained in practice. Operating with the compartment in a horizontal position when the mouth fully emerges means having, upon loading, a maximum water head of only 0.5 cm. This water head allows the withdrawal of a volume $2V_{1,\ \delta=0}=2A_{1,\ \delta=0} * l_i=178 *19=3.38$ L only at a number of revolutions so low that it cannot be taken into consideration: the reduced flow rate would not even be unloaded into the upper discharge channel, because at low speeds most of the raised water would fall down into the gap between wheel and discharge channel. To deliver a satisfactory flow rate, the volume $2V_{1,\ \delta=0}=2A_{1,\ \delta=0} * l_i=178 * 19=3.38$ L at a higher rpm and water head must be collected.

"Skimming" mode

If the water head in the sump is limited to a few centimetres, a skimming mode is implemented, as the mouth of the compartment does not dip completely into the water, but simply skims its surface. In these conditions, the volume V of water that, for a certain water head h_{bm} enters the compartment, depends on the rotation speed ω of the wheel: the slower the wheel the higher the volume. For each maximum water head value, $h_{bm}=2$, 4, 5, 6 and 7 cm, the sections of the mouth immersed in water at the halfway (Fig. 24 position 1) and end (Fig. 24 position 2) of the immersion arc as well as at the halfway point (Fig. 24 position 3) of the emersion arc were calculated and then the incoming flow rate was determined using the weir formulas (Colombo1961: 258–59, Di Ricco 1951: 310–15). This information is then summarized in Fig. 25a, which gives the value of the volume V of water entered the compartment when the mouth emerges completely. The values of V in Fig. 25a were calculated for n = 1 RPM. The other curves are obtained from n = 1 with appropriate extrapolations, taking into account, e.g., that for n = 2 the volume V is halved, while for n = 0.5 it doubles. The curves in Fig. 25a obviously show approximate values for various reasons: the utilized formulas are correct for large flow rates (and this is not our case), the sections of the mouth immersed in the various positions are never exactly triangles, trapezoids or rectangles, etc. They cannot therefore be utilized for the purpose of designing the wheel, but they are extremely useful for understanding how it works.

When starting the wheel, the operator, climbing to the support beams, moves to position A (on the perpendicular to O—Fig. 25b). Subsequently, moving slowly towards L, he will rotate the wheel in the direction indicated by the arrow, causing all the compartments filled

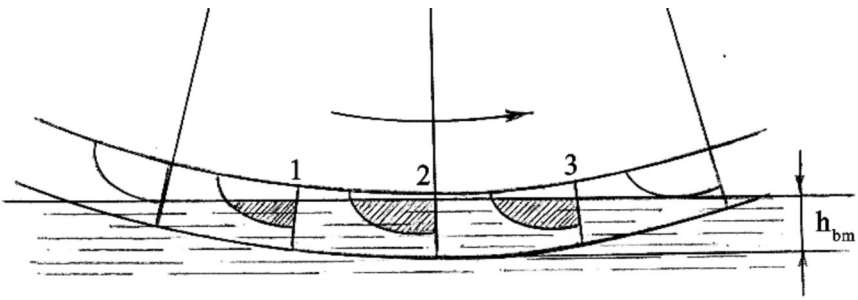

Fig. 24 Rio Tinto wheel—the sections of the mouth immersed in water at the halfway (position 1) and end (position 2) of the immersion arc as well as at the halfway (position 3) of the emersion arc

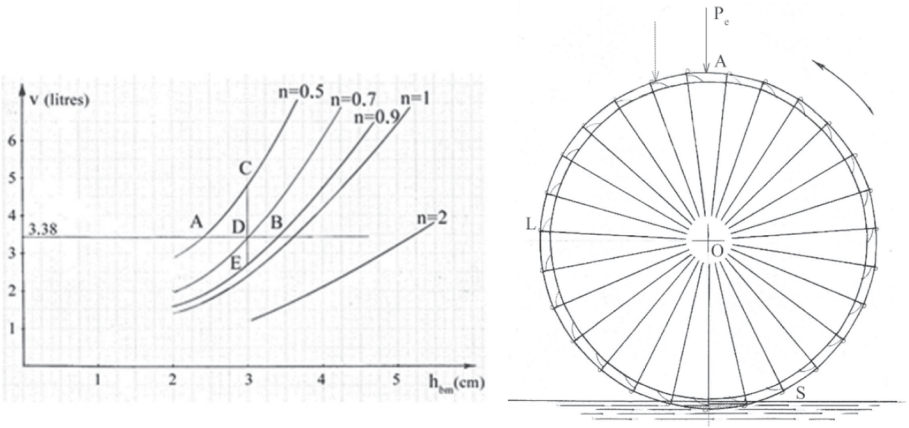

(a) (b)

Fig. 25 Rio Tinto Wheel: **a** volume of water collected by a compartment having a single lateral mouth, plotted against the maximum head h_{bm}, at various wheel RPM (n) showing a satisfactory volume of 3.38 l per compartment; **b** operator positions on the wheel from L to A, giving different speeds of operation

with water to emerge from S, one after the other. From his position he is able to observe clearly the mouth of the compartments when they pour the water into the discharge channel. He is therefore able to notice if they start losing water before reaching the discharge channel. If this occurs, it means that the operator is moving the wheel at a too low speed, withdrawing a volume greater than 3.38 L per compartment (point C on Fig. 25a). He will therefore increase the rotating speed until reaching point D. He will realize that he has reached it as soon as he observes that all the water discharged is poured into the upper discharge channel, as shown in Fig. 20b (beginning and ending discharging at the same level). If, on the contrary, he realizes that water begins pouring at a level higher than that at which it ends, this means that he is operating at a too high speed, withdrawing a volume of water of less than 3.38 L per compartment: practically he finds himself at a point like E in Fig. 25a. He will therefore reduce the rotating speed until he again reaches point D.

The above-described movements were certainly not easy, and it is unthinkable that the operator could perform them while maintaining a precarious balance position without any support. We therefore assume the presence of wooden crosspieces that would allow the worker to carry out the above-described movements with relative ease and safety. The presence of these crosspieces would also allow the operator to adjust the wheel rotation speed simply by unloading part of his weight on them without necessarily moving to a different position on the wheel.

The wheel can fully discharge at the maximum height only the very precise volume of water (3.38 L) set at the design stage. Consequently, as the water level in the sump varies, the operator will have to change the wheel rotation speed in such a way as to "ride" the segment AB (Fig. 25a). We can say that, in skimming mode, the wheel behaves like a pump operating at a constant volume.

If we trust the curves in Fig. 25a and assume that the maximum climbing speed continuously sustainable by the operator is 300 m/hour (corresponding to a rotation speed of ~ 0.87 RPM), then we can infer that, in "skimming" mode, the volume of 3.38 L could be with-

drawn with water heads h_{bm} up to a maximum of approx. 3.5 cm, with which you will obtain the maximum flow rate. The conditions that ensue in this case are shown in Fig. 26.

Having drawn the wheel in this new position, the following data can be calculated:

$\mathbf{M_{r,\delta}}$: resistant moment exerted on the wheel by the weight of the water contained in the emerged compartments,

$\mathbf{h_t}$: total lifting height,

$\boldsymbol{\beta_\delta}$: angular position into which the 70 kg operator must be standing in order to balance the moment $M_{r,\delta}$,

$\mathbf{Q_{p,\delta}}$: collected flow rate,

$\mathbf{Q_{s,\delta}}$: flow rate poured into the discharge channel at a height of 212.45 cm above the axis of the wheel.

The actual flow rate can be calculated as per the Dolaucothi wheel (Table 3). The actual efficiency index of the wheel drops to the value $e_e = (220.1 + 212.45) / 456 = 0.948$.

The "plunge" mode

With greater water heads you switch from "skimming" to "plunging" mode, where the compartment is completely immersed under the water. To examine how the behaviour of the wheel varies, three different immersions have been taken into consideration: $\delta = 13°$, $\delta = 26°$ and $\delta = 39°$. For each of them various data were calculated as in Table 4.

It is observed that the Rio Tinto wheel guarantees the best results when it works in "skimming mode", in fact when $\delta = 6°$ you simultaneously have the maximum total lifting height

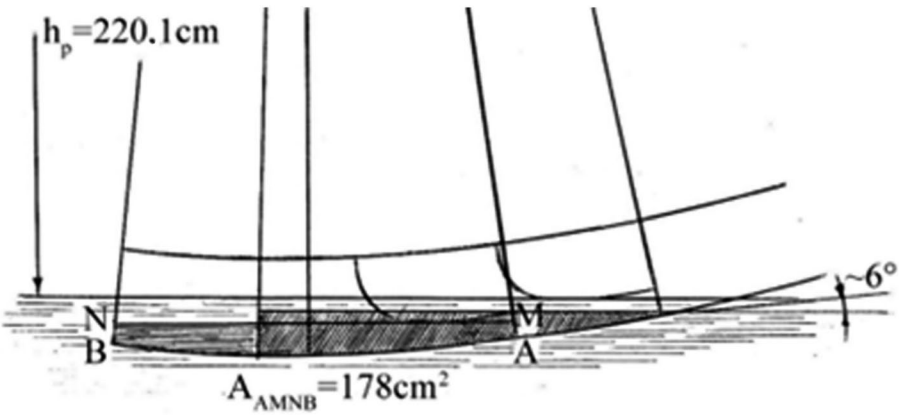

Fig. 26 If the 3,38 L volume is withdrawn with a water head $h_{bm} = 3.5$ cm, whenever the mouth completely emerges, the compartment is no longer in a horizontal position but is inclined upwards by approx. 6° and the internal water level is no longer tangential to the mouth's profile but is slightly under it

Table 3 Rio Tinto Wheel, actual flow rates achieved in "skimming" mode with calculation data

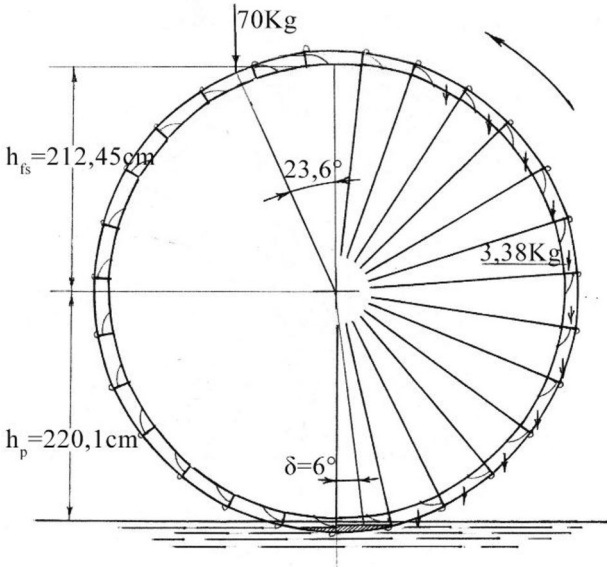

Sketch showing dimensions on wheel

Angle of emersion δ (°)	Immersion height h_p (cm)	Discharge finishing height h_{fs} (cm)	Total lifting height h_t (cm)	Volume per compartment V_δ (litres)	Total Resisting Moment $M_{r,\delta}$ (kgm)	Angle of operator position β_δ (°)	Flow rate achieved $Q_p,\delta = Q_s,\delta$ (l/min)
~6	220.1	212.45	432.55	~3.38	~63.47	~23.6	~79

$h_t = h_p + h_s = 220.1 + 212.45 = 432.55$ cm and the maximum flow rate poured into the upper channel $Q_s \approx 79$ L/min.

It is also observed that, if the discharge channel is positioned at the maximum height of 212.5 cm, as the degree of immersion increases up to $\delta = 26°$, the withdrawn flow rate $Q_{p,\delta}$ increases as well, while that released ($Q_{s\delta,fs}$) decreases. In fact, it verifies that the volume of water collected by the single compartment also increases and therefore the resistance moment as well is higher. The operator must then reach an angle $\beta_{26} = 43°$ where, at the same climbing speed, the longer it takes to move from one cleat to the next, the more the wheel rotation speed is reduced. The final result is that as the degree of immersion increases, the discharged flow rate ($Q_{s\delta,fs}$) is reduced, because, for the same volume poured into the upper channel, the frequency of discharge is less.

The position relevant to the degree of immersion $\delta = 26°$ seems to be a limit. For higher degrees of immersion, the operator will shift his position towards the top of the wheel. The volume taken from the single compartment does not vary (remaining around 7 L) while the number of emerged compartments containing water is reduced and therefore also the total resisting moment acting on the wheel. The speed thus increases again and with it the flow rate $Q_{s\delta,fs}$ of the water discharged into the upper channel.

As with skimming mode, the total resisting moment acting on the wheel does not depend only on the weight of the water lifted. Consequently, the angular positions β_δ actually assumed by the operator were necessarily higher than the values indicated in the tables above.

In any case it is reasonable to assume that the operator, alone, was able to start and keep the wheel rotating, since he had the possibility, by moving away from the top of the wheel) to increase the driving moment up to the maximum value of ~ 160 kgm, against the maximum value of ~ 110 kgm due to the weight of the water alone.

Considerations concerning the maximum diameter of the wheel.

Rio Tinto type wheels were installed inside mines for the drainage of infiltration water. It is logical to think that the wheel's designer, with the aim of reducing to a minimum the number of wheels to be installed in series, made them with the maximum possible diameter.

To confirm this statement it is sufficient to observe that for a wheel of 5 m diameter and N = 32 compartments (having approximately the same dimensions as the Rio Tinto wheel, as the degree of immersion δ varies, we have values as reported in Table 5.

It can be noted that just to balance the maximum value of the M_r moment due only to the raised water, the 70 kg operator must position himself on one rather unlikely position of $\beta = 62°$. To the above moment $M_{r,\delta}$ must also be added those due to the friction of the axis and to the braking action of the water on the compartments and on the spokes. Consequently, the angular positions β actually assumed by the operator would necessarily have been higher than the values indicated in the above table.

It can therefore be inferred that the Rio Tinto wheel was designed with the maximum diameter of 4.56 m, enabling it to be moved by a single operator even in the event of flooding.

Table 4 Rio Tinto wheel, actual flow rates achieved in "plunge" mode with calculation data

Angle of emersion δ (°)	Volume per compartment V_δ (litres)	Discharge starting height h_{is} (cm)	Discharge finishing height h_{fs} (cm)	Total Resisting Moment $M_{r,\delta}$ (kgm)	Angle of operator position β_δ (°)	Revolutions per minute n_δ (RPM)	Flow rate collected by wheel $Q_{p,\delta}$ (l/min)	Flow rate discharged at maximum height $h_{fs}=212.45Q_{s\delta fs}$ (litri/min)
6	3.38	212.45	212.45	63.47	23.6	~0.80	79	79
13	5.89	142.00	212.45	102.39	39.9	0.55	86	21
26	6.86	35.80	212.45	108.84	43.0	0.51	95	19.68
39	7.07	0.80	212.45	101.70	39.6	0.55	105	21

Table 5 Operator position needed to operate a 5 m diameter wheel in "Plunge" mode

Angle of emersion δ (°)	Volume per compartment V_δ (litres)	Resisting moment M_r (kgm)	Angle of operator position β_δ (°)
11,25	~5,2	~131	~48
22,5	~6,4	~151	~60
33,75	~7,1	~155	~62
45	~7,1	~143	~55

Conclusions

In the period between the second half of the first century BCE. and the second to third century CE, Roman water-lifting wheels operated by treading were subjected to an inceasing process of optimization.

The oldest model described by Vitruvius (*De Architectura* 10.4-7) involved a water collection operation requiring the complete immersion of the containers in the loading well and reached a total lifting height of only 60% of the wheel diameter.

Wheel design underwent a revolutionary transformation in the first century CE, as evidenced by the specimen found in the mine of Dolaucothi. A series of improvements increased the total lifting height. The containers, having a length equal to a man's stride were incorporated in the outer edge of the wheel. The water intake and discharge opening were on the side of the compartment, resting on the front septum at a carefully calculated distance from the external edge. As a result, the compartment was in a horizontal position when its mouth emerged completely and could collect the water as deep as possible.

The impressive precision with which the shape of the mouth is designed and the value of the wheel internal diameter calculated enabled the water discharge to start at the same height at which it ended, corresponding to the horizontal position of the compartment. The water discharge took place within the maximum possible arc (corresponding to the length of the compartment). The designer of Dolaucothi thus achieves a total lifting height 329.79 cm, equal to 91% of the diameter.

Further improvement in the performance of this type of wheel was obtained at Rio Tinto, where the designer applied the same principles, but with an important variation. The volume of water to be collected by the compartment in the horizontal position when the mouth emerges completely was reduced significantly (the section of the water raised is reduced from 515.2–178 cm^2). This change reduced the torque needed to turn the wheel, thus allowing the increase of the diameter of the wheel and therefore of the maximum lifting height. Given the reduced quantity of water raised, in order to obtain alignment of the start and end discharge levels, the mouth was also opened on the internal diameter of the compartment, assuming the characteristic half-shield shape found in most of the archaeological remains of this type of water-lifting wheel.

Nevertheless, the volume of water collected by each compartment may not be reduced indefinitely. It would get to the point where the water is no longer able to "jump" from the compartment to the drainage channel. The Rio Tinto design probably reached the minimum value of the raised water that guarantees correct discharge. Therefore the diameter of the Rio Tinto wheel (~456 cm) represents the maximum diameter for wheels located in mines, because, wheels with compartments of the same size but with larger diameters would not be moveable by just one man.

The Rio Tinto wheel thus obtained provides the best performance giving simultaneously a maximum total lifting height h_t=432.55 cm, equal to 95% of the wheel diameter, and the maximum flow rate poured into the upper channel Q_s≈79 L/min.

Acknowledgements Many thanks to Prof. John Peter Oleson for his generous assistance with this article. The appreciation shown towards my work is a source of great satisfaction. His advice on my English and information regarding the archaeological remains of water lifting wheels were crucial for this article.

Funding No outside funding was received for the preparation of this research.

Declarations

Conflict of interest There are no competing interests for the data in this research.

References

Boon GC, Williams C (1966) The Dolaucothi drainage wheel. J Roman Stud 56:122–127
Colombo G (1961) Manuale dell'Ingegnere, 80th edn. Hoepli, Milan
Domergue, C-D, Bordes, J-L (2004) La roue élévatoire de la Mine romaine de Tharsis (Huelva, Espagne). Étude archéologique et technique de ce type de roue. In: Minonzio F (ed.) Problemi di macchinismo in ambito romano. Commune di Como, Como, pp 87–105
Oleson JP (1984) Greek and Roman mechanical water-lifting devices: the history of a technology. University of Toronto Press, Toronto
Oleson, J P (2000) Water-Lifting. In: Ö. Wikander (ed) Handbook of ancient water technology. Brill, Leiden, pp 217–302
Pollione, V (1978) De Architectura, interpretazione a cura di G Florian. Giardini Editori e Stampatori, Pisa
Di Ricco, G (1951) Idraulica, Vol. I. Vallerini Editore, Pisa-Rome
Schiøler T (1973) Roman and Islamic water-lifting wheels. Odense University Press, Odense
Weisgerber, G (1979) Das römische Wasserheberad aus Rio Tinto in Spanien im British Museum, London. Der Anschnitt: Mitteilung d. Vereinigung d. Freunde von Kunst und kultur im Bergbau. (Bochum) 31: 62–80

Publisher's Note Springer Nature remains neutral with regard to jurisdictional claims in published maps and institutional affiliations.

Springer Nature or its licensor (e.g. a society or other partner) holds exclusive rights to this article under a publishing agreement with the author(s) or other rightsholder(s); author self-archiving of the accepted manuscript version of this article is solely governed by the terms of such publishing agreement and applicable law.

Lauro Alberto Barbaresi Lauro Alberto Barbaresi graduated in Mechanical Engineering in 1964 from the University of Rome "La Sapienza." In the Faculty of Engineering he was an assistant in the chair of Mechanics Applied to Machines and a contract professor in that of Machines. He has worked for more than thirty years in the metalworking and chemical industries, covering all the career steps from recent graduate to CEO. He has designed and built entire factories for the metalworking industry. He has privately carried out studies on the engineering works of ancient Rome.